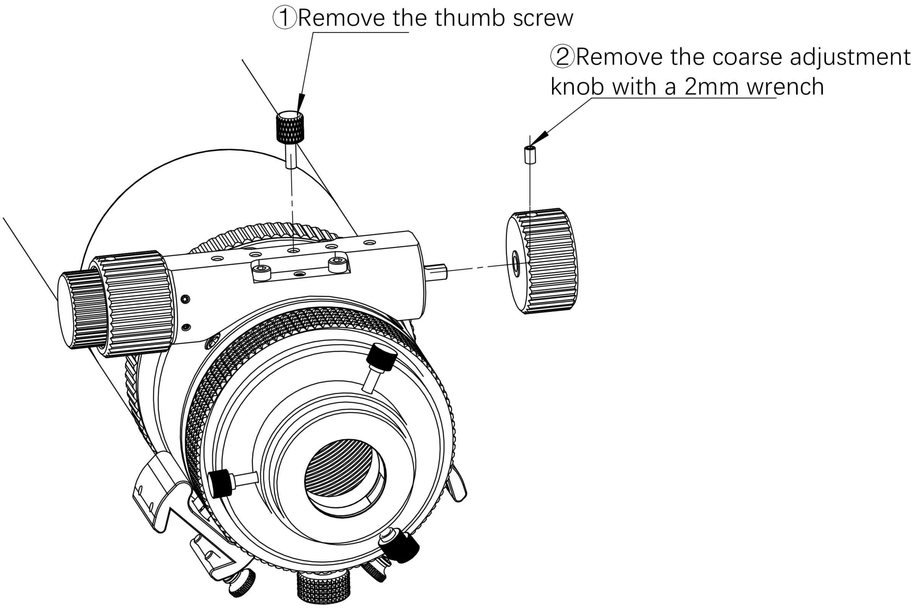
①Remove the thumb screw
②Remove the coarse adjustment knob with a 2mm wrench

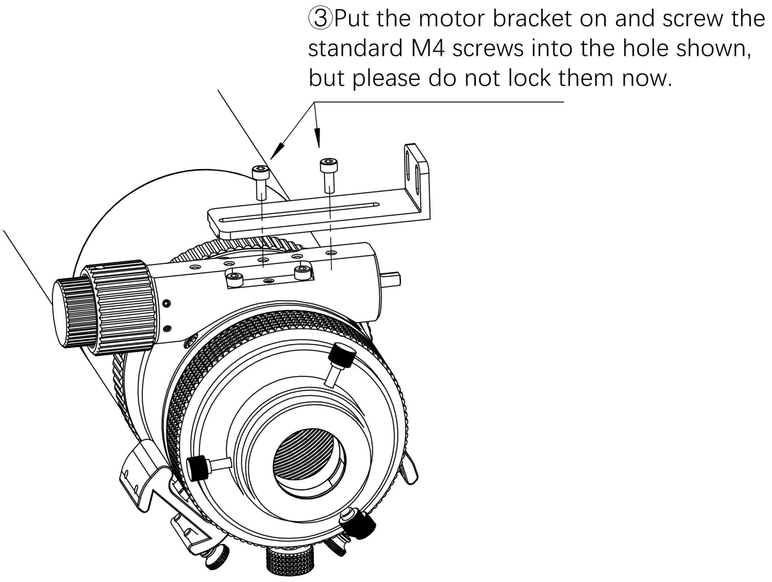
③Put the motor bracket on and screw the standard M4 screws into the hole shown, but please do not lock them now.

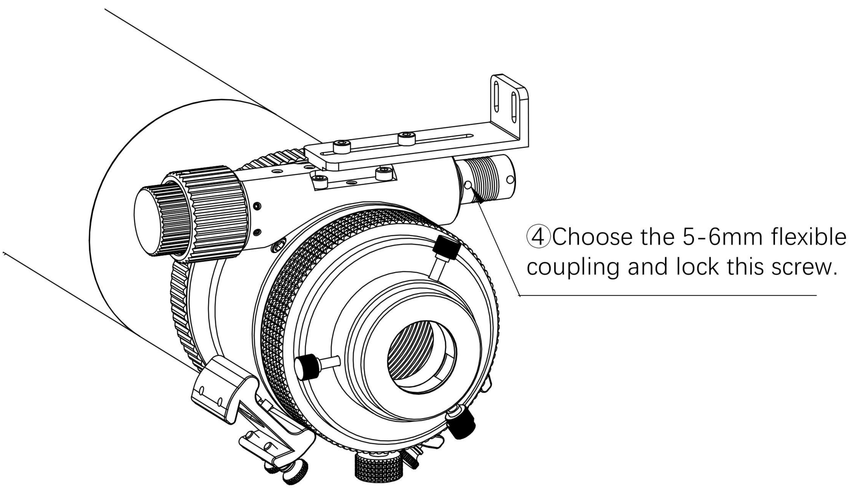
④Choose the 5-6mm flexible coupling and lock this screw.

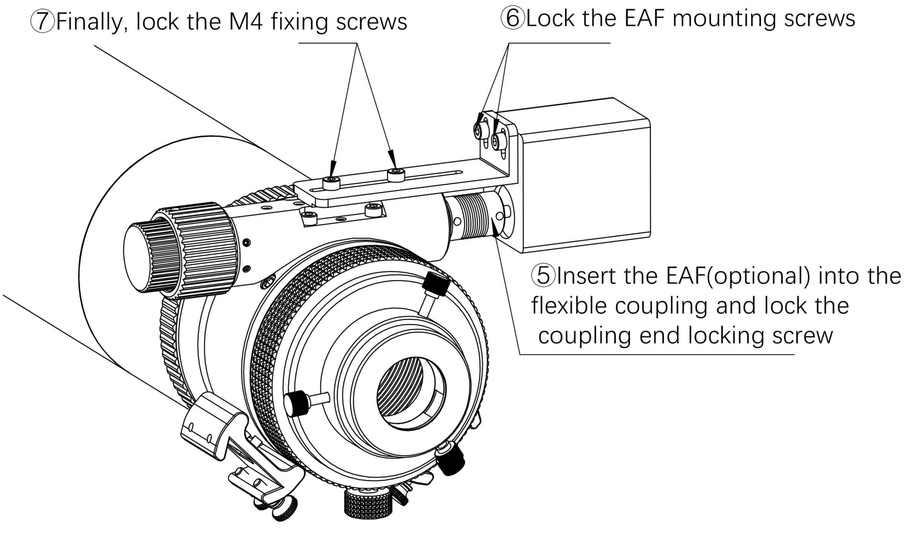
⑦Finally, lock the M4 fixing screws
⑥Lock the EAF mounting screws
⑤Insert the EAF(optional) into the flexible coupling and lock the coupling end locking screw