①

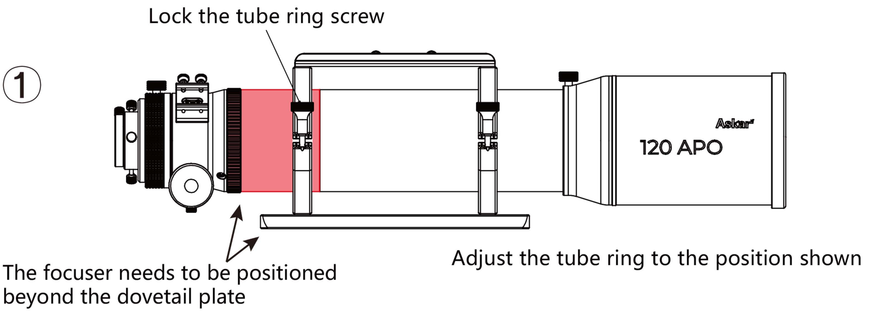
Lock the tube ring screw
Asiar
120 APO
The focuser needs to be positioned
beyond the dovetail plate
Adjust the tube ring to the position shown

②

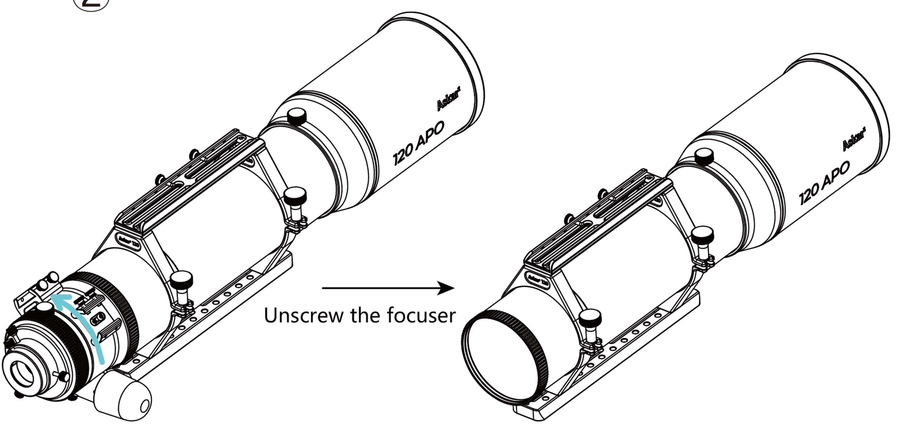
Asiar
120 APO
Unscrew the focuser
Asiar
120 APO

③

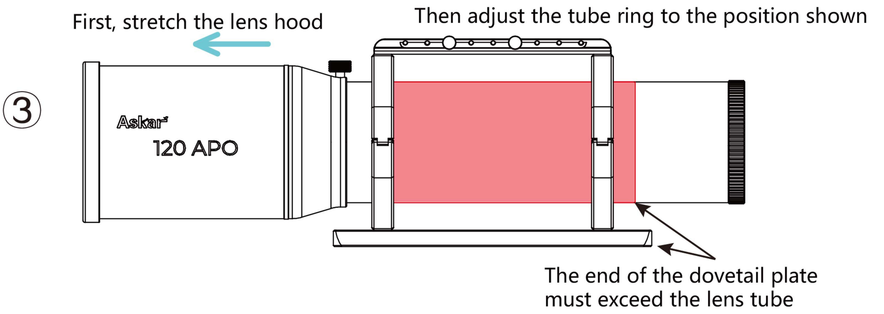
First, stretch the lens hood
Then adjust the tube ring to the position shown
Asiar
120 APO
The end of the dovetail plate
must exceed the lens tube

④

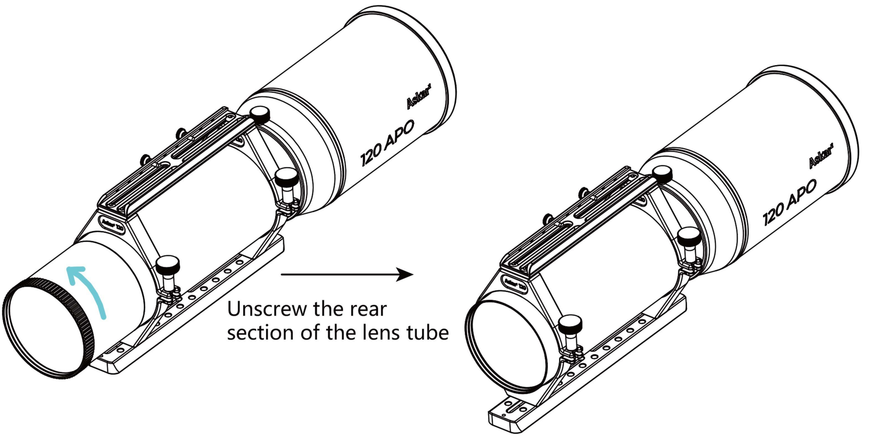
Asiar
120 APO
Unscrew the rear
section of the lens tube
Asiar
120 APO

⑤

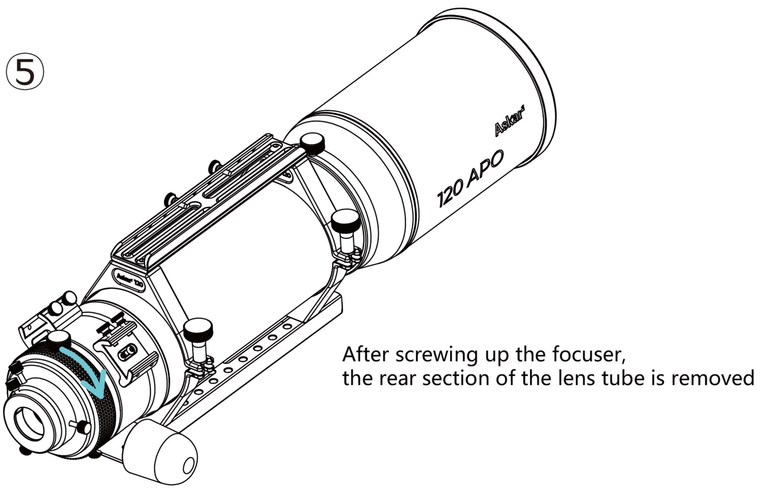
Asiar
120 APO
After screwing up the focuser,
the rear section of the lens tube is removed