以EAF举例
Take EAK as an example

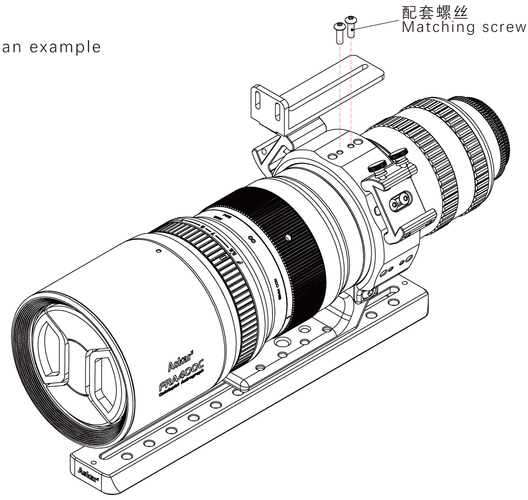

① 旋下粗调锁紧旋钮，将粗调手轮刻度对准无穷远标志处
将电调连接板中央槽对准抱箍顶部M4螺丝孔位，并用两颗电动调焦原装螺丝固定

① Unscrew the coarse adjustment locking screw,align the coarse adjustment ring scale with the infinity mark.
Align the central slot of the EAF motor bracket with M4 screw hole at the top of the tube ring and fix it with two original electric focuser locking screws.

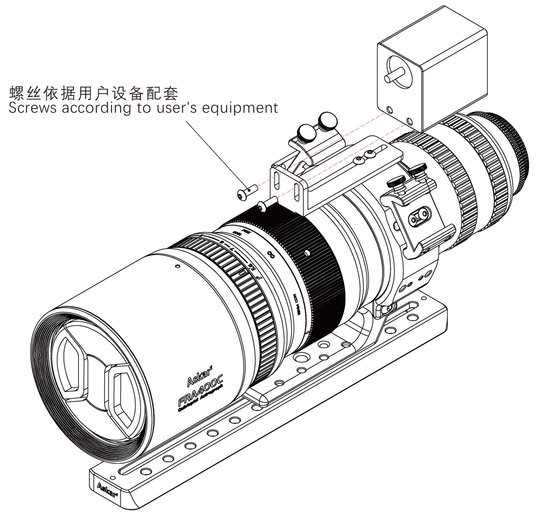

② 用户依据设备，选择螺丝，将电调固定于标准连接板上，但不需拧紧

② The user selects the screws according to the equipment,and fixes the electric focuser on the standard connection plate,but does not need to be tightened.

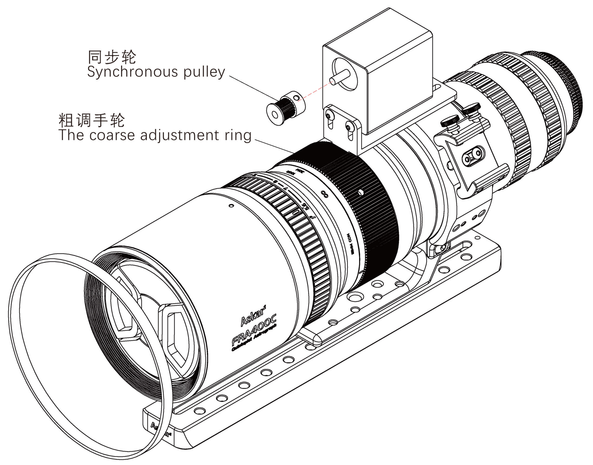

③ 将适配电调的皮带，从镜头前端套入至粗调手轮位置，并同时安装同步轮

③ Slide the belt for the electronic focuser from the front of the lens to the coarse adjustment and install the synchronous pulley at the same time.

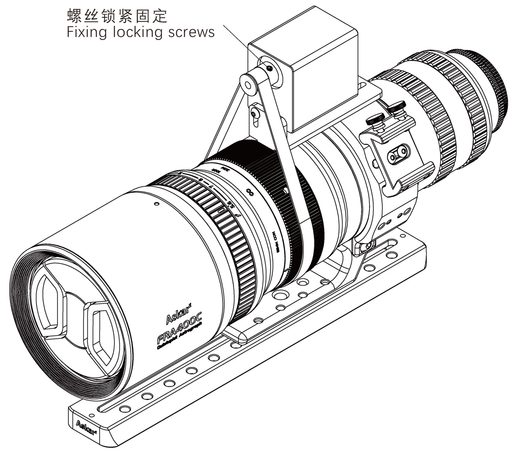

④ 装配完成后，向上提起电动调焦器，使同步带紧绷，接着锁紧步骤②螺丝以及同步轮固定螺丝

④ After assembly,lift the electric focuser upwards to tighten the synchronous belt, and then lock the step ② screws and the fixing screws of the synchronous pulley.